DOI: 10.12982/CMUJNS.2013.0010

Self-Compacting Concrete Incorporating Various Ratios of Rice Husk Ash in Portland Cement*

Gritsada Sua-Iam[1] and Natt Makul[2*]

[1]The Project for Consortium on Doctoral Programs of Rajabhat University, Phranakhon Rajabhat University, Bangkok 10220, Thailand
[2]Department of Building Technology, Faculty of Industrial Technology, Phranakorn Rajabhat University, Bangkok 10220, Thailand

**Corresponding author. E-mail: shinomomo7@hotmail.com*

ABSTRACT

We evaluated self-compacting concrete mixtures containing various weight ratios of treated rice husk ash (RHA) obtained from electric power plant combustion. Ordinary or Type 1 Portland cement (OPC) was partially replaced by rice husk ash at levels of 0, 20, 40, and 60% of the total weight of binder materials (OPC and RHA). The binder material content for all mixtures was maintained at 525 kg/m^3. Fresh and hardened state properties were tested including unit weight, slump flow J-ring, V-funnel flowing time and compressive strength. The rice husk ash consisted of partially amorphous silicon dioxide (SiO_2) particles with an equivalent volume mean particle size of 24.32 µm. Increasing the rice husk ash fraction resulted in a decrease in unit weight and an increase in the corresponding T_{50} V-funnel times. A 40% rice husk ash replacement level in ordinary Portland cement can potentially develop the highest compressive strength, up to 440 kg/cm^2.

Keywords: High weight ratio, Self-compacting concrete, Electric power plant, Rice husk ash

INTRODUCTION

Biomass has long been an important renewable energy source. In rural Thailand, biomass fuels are not traded, but instead mostly home-grown or collected by family labor. However, biomass is also increasing in commercial value in energy markets where modern technology and competition have previously dictated the use of more efficient and clean fuels.

Rice is a major agricultural product in Thailand, and disposal of rice husk is a serious problem for larger mills. In several plants the husks are used for cogeneration and power production. The rice husk ash (RHA) produced in these operations has its own disposal costs and problems. We sought an effective method of reducing these costs by using the ash to produce the high-performance building material known as self-compacting concrete (SCC).

---

*Presented in the 1st ASEAN PLUS THREE Graduate Research Congress (AGRC), March 1-2, 2012, Chiang Mai, Thailand.

Self-compacting concrete was developed in 1983 to address a shortage of skilled construction workers (Okamura and Ouchi, 2003). The essential properties of self-compacting concrete are a highly viscous matrix and deformability without segregation. Adding rice husk ash to the concrete mixture has the potential to improve the properties of self-compacting concrete (Sua-iam and Makul, 2012). Previous studies have intensively investigated the use of large amounts of mineral admixtures such as pulverized fuel ash and limestone in self-compacting concrete (Nehdi et al., 2004; Felekoglu, 2007; Dinakar et al., 2008; Sukumar et al., 2008). We focused on self-compacting concrete mixtures produced using various amounts of rice husk ash.

MATERIALS AND METHODS

Materials

Ordinary or Type 1 Portland cement (OPC) complying with the American Society for Testing and Materials (ASTM) C150 (2009) and ground rice husk ash was used in the experiments.

The chemical compositions of the Ordinary Portland Cement and rice husk ash are provided in Table 1. To improve workability, a polycarboxylate-based superplasticizer was added at the recommended dosage of 2.0 wt% of binder materials.

Table 1. Chemical compositions of Ordinary Portland Cement and risk husk ash.

Element	OPC (%)	RHA (%)
SiO_2	16.37	93.00
Al_2O_3	3.85	0.35
Fe_2O_3	3.48	0.23
MnO	0.08	0.14
MgO	0.64	0.41
CaO	68.48	1.31
Na_2O	0.06	0.15
K_2O	0.52	1.61
SO_3	4.00	0.03
LOI	1.70	1.90

As revealed in scanning electron micrographs at 4500 magnification (Figure 1), the particle shape of Ordinary Portland Cement is irregular (Figure 1(a)), whereas rice husk ash is multilayered, microporous and irregular (Figure 1(b)).

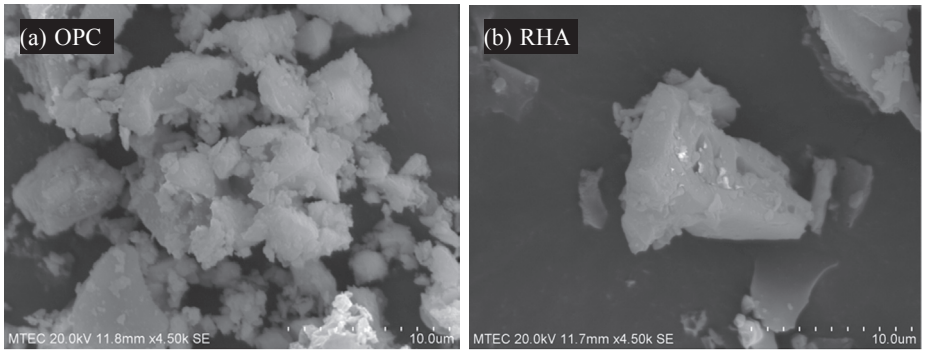

Figure 1. Scanning electron micrographs (4500x) of (a) Ordinary Portland Cement and (b) rice husk ash.

The rice husk ash (Figure 1 (b)) was mechanically ground before use. The particle size distributions of the rice husk ash and Ordinary Portland Cement particles are presented in Figure 2. Aggregate materials included silica sand (FA) with a nominal maximum size of 4.75 mm and crushed limestone rock (CA) with a nominal maximum size of 10.0 mm (ASTM C33, 2011).

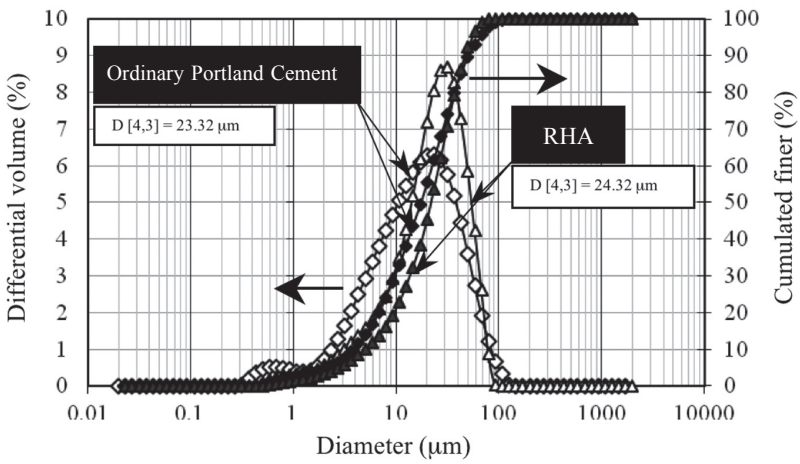

Figure 2. Particle size distributions of Ordinary Portland Cement and rice husk ash.

Testing procedures

The properties of the freshly-prepared, self-compacting concrete were tested as specified in ASTM C138 (2011). The slump flow test was performed using an inverted mold without tamping, in accordance with ASTM C1611 (2011). The reported spread diameters are the averages of four measurements. The passing ability was tested using a J-ring according to the procedure in ASTM C1621 (2011). The V-funnel flow time was tested using the funnel illustrated in Figure 3, accordance with EFNARC (2002). Compressive strength tests were performed after 1, 3, 7, and 28 days in accordance with ASTM C39 (2011).

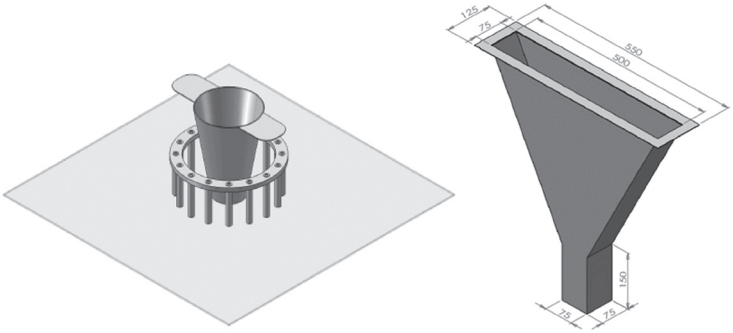

(a) J-ring (b) V-funnel

Figure 3. Slump flow, J-ring test and V-funnel test apparatus.

Mix proportions

The mixture compositions are summarized in Table 2. Ordinary Portland Cement was partially replaced with rice husk ash at the replacement level of 0, 20, 40 and 60% of the total weight of binder materials (OPC and RHA). The binder material content and the water/cementitious ratio (W/C) for all concrete mixtures were kept constant at 525 kg/m^3 and 0.32, respectively.

Table 2. Details of self-compacting concrete mixture.

SCC type	RHA [%wt.]	W/C	Materials [kg/m^3]						Super [%]*
			Cementitious	OPC	RHA	FA	CA	Water	
SCC525R0	0	0.32	525	525	0	948	802	168	2.00
SCC525R20	20	0.32	525	420	105	948	802	168	2.00
SCC525R40	40	0.32	525	315	210	948	802	168	2.00
SCC525R60	60	0.32	525	210	315	948	802	168	2.00

Note: *Superplasticizer is a polycarboxylate-based high range water reducing admixture according to ASTM C494 (2011).

The symbols representing the self-compacting concrete mixtures were assigned as SCCxRy, where x is the binder content in kg/m^3 and y is the percentage of ordinary Portland cement replaced with rice husk ash.

RESULTS

The slump flow, J-ring flow, blocking assessment, V-funnel time at T_{5min} and unit weight of the self-compacting concrete samples are listed in Table 3.

Table 3. Flowability of self-compacting concrete: slump flow, J-ring flow, V-funnel time and unit weight.

SCC type	Slump flow (SF) [mm]	J-Ring flow (JRF) [mm]	Difference SF-JRF [mm]	Blocking Assessment	V-funnel time. [sec]	Unit weight [kg/m^3]
SCC525R0	680	660	20	No.	15	2453
SCC525R20	680	660	20	No.	45	2373
SCC525R40	700	680	20	No.	62	2333
SCC525R60	740	700	40	Minimal.	75	2258

Note: The blocking assessment refers to the difference between slump flow and J-ring flow according to ASTM C1621 (2011).

Unit weight

The unit weight of the self-compacting concrete decreased with increasing rice husk ash content. It is well known that the unit weight is a function of the specific gravity of Ordinary Portland Cement and rice husk ash – the specific gravity of Ordinary Portland Cement is more than that of rice husk ash. Therefore, the unit weight of concrete decreased when the amount of rice husk ash increased in the mixtures.

Flowability

Slump flow. The slump flow of the concrete varied in the range of 680-740 mm, which indicated a better filling ability by flow spread (Safiuddin et al., 2010). The slump flow values are mainly related to the replacement levels of rice husk ash. The slump flow increased with increasing addition of rice husk ash, indicating an increase in the viscosity of the concrete mixture with increasing rice husk ash content. The flowing ability results involved the suitable dosages of superplasticizer, rice husk ash and water-cement ratio (Safiuddin et al., 2011).

J – Ring. The J-ring test in conjunction with the slump flow test provides a means of determining the passing ability of self-compacting concrete, or the ability of the concrete to flow under its own weight to completely fill all spaces. Depending upon the procedure selected, a modified slump cone is placed in an inverted position in the center of the J-ring and filled with concrete in a single lift. The cone is then lifted straight up and the diameter of the resulting circular flow of concrete is measured. A similar test is performed without the J-ring in place and the difference in the flow diameters is used to obtain the blocking assessment. According the slump flow test, the J-ring flow increased with increasing addition of rice husk ash. There was no apparent blocking in the control or 20% and 40% rice husk ash samples, but a small degree of blocking was observed in the 60% rice husk ash sample.

V-funnel flowing time. The flow time increased in proportion to the rice husk ash content. Rice husk ash particles can absorb water, resulting in a highly viscous mix and reducing bleeding of cement, aggregate particles or water. The typical increase in flow time for a mixture in which 60% of the Ordinary Portland Cement was replaced with rice husk ash was 75 sec. The self-compacting concrete behaved as a low fluidity or stiff mixture with a crumbly texture.

Compressive strength of self-compacting concrete

Compressive strength results obtained are plotted in Figure 4. The gained compressive strength developed continually over the 28-day curing period: the 28-day compressive strength varies from 292 to 688 kg/cm^2, with control mixtures having the highest compressive strength. The increased compressive strength of the pure cement mixtures was due to the availability of additional calcium silicate hydrate (C-S-H) products resulting from pozzolanic reactions. These products filled voids and produced a denser internal structure (Safiuddin et al., 2010).

Additional rice husk ash affected to reduce compressive strength developments. Self-compacting concrete mixtures at 40% wt. of the Ordinary Portland Cement replaced with rice husk ash developed higher strength than those of the 20% and 60% concrete mixtures as illustrated in Figure 4.

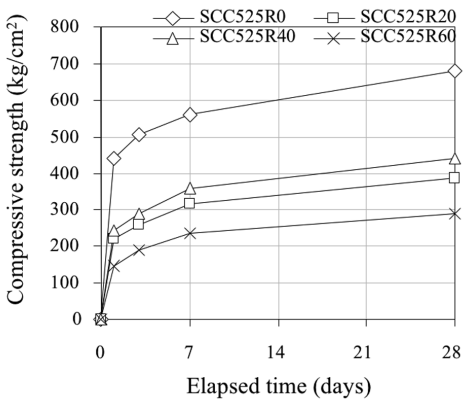

Figure 4. Compressive strength of self-compacting concrete.

Microstructural characteristics

The use of scanning electron microscopy associated with X-Ray dispersive energy microanalysis (EDX) is essential for the characterization of self-compacting concrete. These techniques may be used to identify the morphological and chemical differences between rice husk ash and OPC.

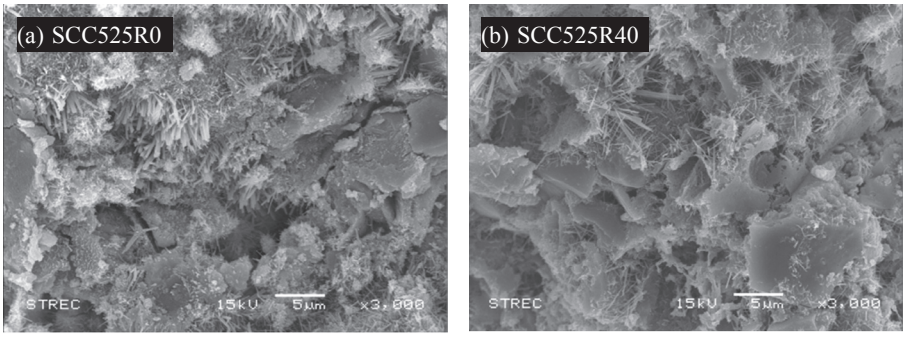

Figure 5. Scanning electron micrographs (3000x): (a) SCC525R0 and (b) SC-C525R40.

As clearly seen in Figure 5(a) and Figure 5(b), the concretes consist of hydrated phases and pores, as well as cores of $Ca(OH)_2$ dendrite crystals, calcium silicate hydrate (C-S-H) and granular structure. Further, more ettringite is found in the control self-compacting concrete mixture than the SCC-RHA mixture.

Figure 6 shows microanalysis using EDX technique that is a semi-quantitative standard-less analysis; it confirms that the major element in rice husk ash mixtures is silicon (Si).

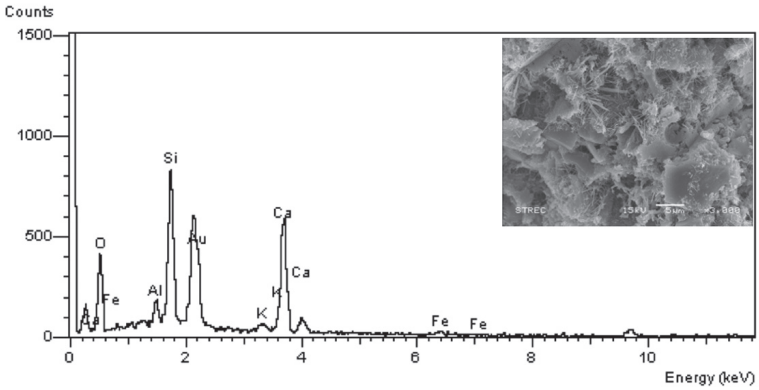

Figure 6. EDX Spectrum in area SCC525R40.

DISCUSSION

Adding rice husk ash to self-compacting concrete can improve its properties. First, adding rice husk ash decreases the unit weight of self-compacting concrete. This is due to the fact that when the amount of water and cementitious content are constantly maintained, the unit weight of self-compacting concrete is therefore related to the specific gravity of rice husk ash and Ordinary Portland Cement – with the specific gravity of Ordinary Portland Cement (3.20) higher than rice husk ash (2.20) (Sua-iam and Makul, 2012). Second, adding rice husk ash can improve the

flowability of self-compacting concrete. This is especially the case with the 60% rice husk ash mixture, which results in a higher paste volume because of its lower density, reduced friction between the aggregate-paste interfaces, and improved cohesiveness and plasticity; as a result, increasing workability similar to J-Ring test results (Safiuddin et al., 2010 & 2011). On the other hand, the viscosity and segregation resistance of self-compacting concrete mixture, as seen from the V-funnel flow times, increase with increasing rice husk ash content. Particularly, the increased surface area adsorbs a greater amount of water, thus decreasing the amount of free water in the self-compacting concrete. With increasing rice husk ash content, the self-compacting concrete displays low fluidity and creates a stiff mixture due to self-blocking particles between Ordinary Portland Cement and rice husk ash particles (Sua-iam and Makul, 2012).

With rice husk ash as a secondary raw material in producing self-compacting concrete, a 40% replacement of rice husk ash has higher compressive strength than a 20% replacement due to suitable micro-filling ability and the pozzolanic activity of rice husk ash. In other words, rice husk ash particles can fill micro-voids among cement particles and produce additional C-S-H content (Yu et al., 1999). Conversely, the compressive strength of the self-compacting concrete mixture containing the 40% rice husk ash replacement is higher than the 60% replacement due to the reduced porosity of concrete and the improved packing density of the combined aggregate in self-compacting concrete (Neville, 1996).

CONCLUSION

The following effects were noted when high volumes of rice husk ash were substituted for Ordinary Portland Cement in concrete mixtures:

- The slump flow and J-ring flow increased with increasing rice husk ash content.
- The unit weight of the self-compacting concrete decreased with increasing rice husk ash content while the T_{50} flow times increased.
- At a 40% rice husk ash replacement level, the self-compacting concrete mixtures develop the highest compressive strength (up to 440 kg/cm^2), when compared to the other self-compacting concrete mixed with rice husk ash.
- Self-compacting concrete mixtures in which up to 60% of the Ordinary Portland Cement was replaced by rice husk ash exhibited a compressive strength of nearly 300 kg/cm^2.
- Based on the limitations of controlled mix proportions, future research should analyze the compatibility of materials and mix proportions.

REFERENCES

American Society for Testing and Material (ASTM) C33/C33M. 2011. Standard Specification for Concrete Aggregates. Philadelphia, PA, USA.

American Society for Testing and Material (ASTM) C39/C39M. 2011. Standard Test Method for Compressive Strength of Cylindrical Concrete Specimens. Philadelphia, PA, USA.

American Society for Testing and Material (ASTM) C138/C138M. 2011. Standard Test Method for Density (Unit Weight), Yield, and Air Content (Gravimetric) of Concrete. Philadelphia, PA, USA.

American Society for Testing and Materials (ASTM) C150/C150M. 2009. Standard Specification for Portland Cement. Philadelphia, PA, USA.

American Society for Testing and Material (ASTM) C494/C494M. 2011. Standard Specification for Chemical Admixtures for Concrete. Philadelphia, PA, USA.

American Society for Testing and Material (ASTM) C1611/C1611M. 2011. Standard Test Method for Slump Flow of Self-Consolidating Concrete. Philadelphia, PA, USA.

American Society for Testing and Material (ASTM) C1621/C1621M. 2011. Standard Test Method for Passing Ability of Self-Consolidating Concrete by J-Ring. Philadelphia, PA, USA.

Dinakar, P., K. G. Babu, and M. Santhanam. 2008. Durability properties of high volume fly ash self consolidating concretes. Cement and Concrete Composites 30: 880-886.

European Federation of National Associations Representing producers and applicators of specialist building products for Concrete (EFNARC). 2002. Specification and Guidelines for Self-Compacting Concrete. Farnham, Surrey, UK.

Felekoglu, B. 2007. Utilisation of high volumes of limestone quarry wastes in concrete industry (self-compacting concrete case). Resources, Conservation and Recycling 51: 770–791.

Nehdi, M., M. Pardhan, and S. Koshowski. 2004. Durability of self-consolidating concrete incorporating high-volume replacement composite cements. Cement and Concrete Research 34: 2103-2112.

Neville, A. M. 1996. Properties of concrete. fourth edition. John Wiley and Sons, New York, USA.

Okamura, H., and M. Ouchi. 2003. Self-compacting concrete. Journal of Advance Concrete Technology. 1: 5-15.

Safiuddin, Md., J. S. West, and K. A. Soudki. 2010. Hardened properties of self-consolidating high performance concrete including rice husk ash. Cement and Concrete Composites 32: 708-717.

Safiuddin, Md., J. S. West, and K. A. Soudki. 2011. Flowing ability of the mortar formulated from self-compacting concretes incorporating rice husk ash. Construction and Building Materials 25: 973-978.

Sua-iam, G., and N. Makul. 2012. The Use of Residual Rice Husk Ash from Thermal Power Plant as Cement Replacement Material in Producing Self-Compacting Concrete. Advanced Materials Research 415-417: 1490-1495.

Sukumar, B., K. Nagamani, and R. S. Raghavan. 2008. Evaluation of strength at early ages of self-compacting concrete. Construction and Building Materials 22: 1394–1401

Yu, Q., K. Sawayama, S. Sugita, M. Shoya, and Y. Isojima. 1999. The reaction between rice husk ash and $Ca(OH)_2$ solution and the nature of its product. Cement and Concrete Research 29: 37–43.